Revista Argentina de Clínica Psicológica
2020, Vol. 2020, Vol. XXIX, N°4, 266-281
DOI: 10.24205/03276716.2020.826

An Empirical Study of B2C E-Commerce Logistics Network Optimization

Xuetao Liu *

Abstract
Focused on the domain of E Commerce logistics services, this paper clarified the Back ground and signification of the research first try. Then, through the study of current work and field investigations of B2C enterprises, we elaborated the future development of the Industry, generalized the tools and theories that were helpful to us and clarified the technical Route of this study. We designed the two-stage model for the B2C E-Commerce logistics network which was based on the network topology. Based on the characteristics of the Two-stage model, we dis signed an improved genetic algorithm to solve the model. At the same Time, we implemented a decision-making system of B2C logistics network optimization and Verified the practicality of the solution. In the end, we reviewed the research process and Achievements, analyzed the weaknesses and pointed out the next steps of the research.
Keywords: E-Commerce logistics network, logistics network optimization, improved genetic algorithm, gravity model

1. Introduction

B2C e-commerce enterprise logistics business is mainly responsible for the realization of logistics in the three streams of e-commerce capital flow, information flow and logistics, mainly including the transportation, warehousing, packaging and order transportation and distribution of goods. It is one of the core business of the B2C e-commerce industry, and its goal is to provide customers with logistics services that meet its standards within a certain cost range. The current research of experts and scholars at home and abroad on B2C e-commerce logistics business can be specifically divided into three major parts: B2C regional logistics, B2C urban logistics and B2C logistics service quality. [1-6]

B2C regional logistics are located in the upstream link of the logistics supply chain of B2C e-commerce enterprises. It is primarily responsible for the trunk-line logistics business of B2C e-commerce nationwide and the trunk-line logistics business of B2C e-commerce region. Compared with other industries' logistics business, this part of the business has two significant characteristics: first, the regional delivery of B2C e-commerce orders has the characteristics of multiple batches, small batches, and high delivery timeliness: second, the B2C e-commerce logistics network structure is complex, the location of upper nodes depends on the aggregation of online shopping orders of lower nodes. In this field, due to the different research focus of internal and external experts, foreign scholars pay attention to the integration of B2C e-commerce enterprise supply chain resources, and generally believe that B2C e-commerce enterprises need to redesign their logistics network to adapt to the rapid development of e-commerce industry. Ou and HC.W. Lau must believe that the success of B2C e-commerce companies stems from the success of their supply chain. Based on the characteristics of the randomness of current e-commerce online shopping orders, their research has developed a fuzzy optimization model that integrates the current B2C industry supply chain , Farhad Kiya proposed a warehousing network optimization design scheme based on random demand, and his model is based on the system's operating costs and random order demand construction; because internal scholars have studied more in the e-commerce logistics distribution model, Liu Yanqiuba combined The characteristics of the current B2C e-commerce logistics service in China, the advantages and

School of Law, Central University of Finance and Economics, 100081, Beijing, China
***Correspondence Email: lxt18810960576@foxmail.com**

disadvantages of the three existing logistics distribution modes of B2C enterprises-self-built logistics distribution mode, third-party logistics distribution mode and self-built and outsourcing logistics mode. Based on the characteristics of the current domestic B2C e-commerce industry, ZipingWang concave designed a multi-vendor, multi-distribution center B2C e-commerce supply chain model, and built a relevant mathematical model based on the pertinent logistics costs. [7-12]

B2C city logistics specifically refer to the city delivery of B2C online shopping orders. Urban delivery of B2C online shopping orders refers to the delivery of online shopping orders between city logistics sites or other logistics function nodes by express delivery according to the logistics distribution requirements of each B2C online shopping order within the city, and the completion of online shopping orders "Last mile" transportation. At present, there are 3 main problems in the urban distribution of B2C online shopping orders: online shopping orders are in small batches but many batches, online shopping orders are widely distributed geographically, and distribution destinations are scattered. Because foreign scholars are more mature in this field than domestic scholars, Claudio Sterlel conducted a study on the specific location of the city distribution center and the resulting route optimization problem. He believes that the construction of the urban logistics distribution system is critical to ensuring the urban logistics circulation and vehicle circulation. His specific design takes into account the city three factors of vehicle flow, pedestrian flow and cargo flow, and the study of vehicle routing optimization problems are added to the bottom of the design. Tech. Du concave designed a dynamic routing system for vehicles based on a genetic algorithm based on the random characteristics of customer orders in the current B2C e-commerce city distribution link, in order to optimize the current B2C e-commerce city distribution. Fang Yuejian studied the logistics distribution vehicle scheduling strategy of e-commerce, and analyzed and solved the vehicle scheduling optimization problems of e-commerce single distribution center and multi-distribution centers. Li Weijian believes that the solution to the traditional VRP problem is not suitable for the path optimization problem in the B2C e-commerce industry. He resolves the above problem by constructing a three-position constraint model for distribution path optimization. [13-15]

Due to the fact that the current external logistics infrastructure is much better than the domestic one, the research on B2C logistics service quality abroad is clearly ahead of Inner. Ramadans human Ramanathan4 'studied the timeliness of B2C e-commerce logistics distribution by using online customer ratings How to influence the loyalty of customers to the website, and on this basis, a consumer behavior analysis model was constructed to quantitatively estimate the impact of e-commerce logistics services on customer loyalty. Yaobin Lu Yan has studied various factors that affect the trust relationship between C2C buyers and sellers based on critical data provided by the famous C2C website in the United States, and how these factors affect consumers' purchasing behavior and consumption habits. [16]

There are two principal problems in the research of domestic and foreign experts in the area of e-commerce logistics. First, the contemporary general focus is on e-commerce logistics distribution models and logistics service quality, and there is a lack of quantitative research on B2C e-commerce regional logistics. Second, existing research methods only apply analogy to other industry logistics network optimization solutions to the B2C e-commerce regional logistics business. Not only does it lack research and analysis of the e-commerce industry, but it also does not integrate diverse factors of suppliers into B2C enterprise logistics network. Therefore, the current research results cannot help B2C e-commerce enterprises to optimize and expand the logistics system. [7-10, 17]

2. B2C e-commerce logistics network topology

Because the B2C e-commerce regional logistics network is an extremely complex system, in order to encourage the smooth progress of this research, this article simplifies the system to a certain extent: 1. The online shopping order volume is based on the market share of the B2C website in various places , Online shopping order market share growth trend and industry growth trend are three factors to calculate, the base period data is the business data and industry development data of the past three years: 2. Due to the limitation of the supplier ’s industrial cluster effect, the location of the supply center is relatively The products that are fixed and can be supplied by the supply center are restricted by the surrounding suppliers, that is, the supply center can only supply several products to the regional logistics distribution center, and other commodities in the regional

distribution center must continue to use the previous supplier ’s direct supply operation mode. Supply center-generally only supply products with considerable sales volume on the website: 3. Depending on the size of each city's online shopping order, set its corresponding logistics service standards. The larger the online shopping order, the higher the logistics service level of the city. Logistics distribution The stronger the timeliness; 4. Classify the orders according to the different products in the online shopping order Different kinds of orders with discrete storage costs and transportation costs.

Figure 1 clearly and clearly describes a bottom-up B2C e-commerce regional logistics network operation mode.

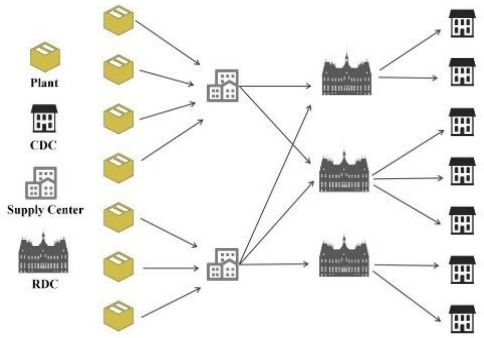

Figure 1. B2C E-Commerce logistics distributi on network

Because the location of the B2C e-commerce supply center is quite determined, the key to the planning of the B2C e-commerce regional logistics network lies in the choice of the location of the RDC (regional distribution center). -Some suppliers transport their commodities to the B2C supply center. The supply center then transports these commodities to the B2C regional logistics and distribution center by means of centralized trunk transportation. Other suppliers transport their commodities directly to the B2C regional logistics and distribution center. After the warehousing, sorting and packaging processes of these commodities, they will be taken from the regional distribution center to each city distribution center for online shopping order city delivery.

Process of online shopping order sales. Fig. 1 not only describes the hierarchical structure of the regional logistics links of the B2C e-commerce self-built logistics network, but also clarifies the precise connection between the nodes at each level.

Fig.2 is a topological structure diagram of B2C e-commerce logistics network, which clearly displays the hierarchical structure of Supply Center-RDC-TCD.

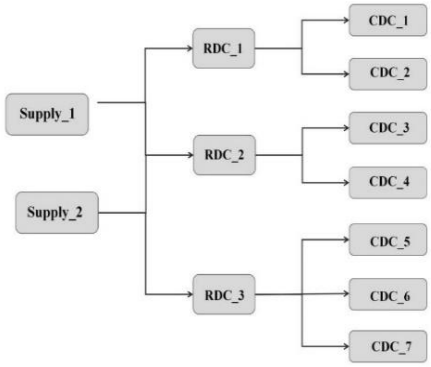

Figure 2. B2C E-Commerce logistics ne twork topology structure

Where:

Plant is the most upstream in the e-commerce regional logistics network topology proposed in this paper. It represents the supplier's production plant, which is responsible for supplying B2C companies with products with high sales volume on the website. The supplier is responsible for shipping its completed goods directly to the B2C logistics supply center nearest to it;

Supply Center represents a B2C e-commerce supply center, which is a node where B2C e-commerce companies receive the supply of large-volume merchandise from websites. In the topology proposed in this article, it mainly has the following three functions: 1. Centralized storage and warehousing of the website's large-selling products: 2. Centralized trunk transportation of the warehousing products: 3. Responsible for ensuring the source and supply of the website's large-selling products Regional supply. The location of supplying Center is determined by human qualitative analysis. The main criteria are as follows: 1. The products supplied by the supply center must be the top 20% of the website's sales: 2. The products supplied by the supply center must have an industrial cluster, because the supply center selects the location of the industrial cluster to build a warehouse: 3. The production capacity of the industrial cluster must be able to meet the order sales demand in the district city: 4. The supply center must be able to supply two different categories of goods. The data processing process at this stage is: 1. Enterprise business data analysis and industry information analysis of various regions of the country, to select logistics alternative points that can satisfy the first three conditions: 2. Determine whether the location of the B2C supply center can provide -Products of more than one category. If it is

established, a B2C supply center is established at the candidate node.

RDC (Regional Distribution Center) indicates that the B2C e-commerce regional city logistics distribution center is at the heart of the B2C e-commerce logistics network regional city logistics link. In the topology structure proposed in this article, it mainly contains the following five functions: 1. Centralized storage of various products placed on the website: 2. Centralized processing and storage of all online shopping order information in the aggregation area city: 3. According to online shopping order information Sort and package the goods: 4. Mainline order transportation to all city distribution centers in the block: s. Provide various related value-added service functions, such as return and exchange.

CDC Citis-cirle Distribution Center) represents a B2C e-commerce site distribution center. These logistics nodes are not selected as RDCs in the selection process of the district city logistics center. Their function is degraded to assist RDC in district and city distribution. These nodes lie at the bottom of the regional logistics network structure proposed in this paper, and the first-step aggregation of online shopping orders is completed at this layer of nodes. At the same time, CDC is likewise the entrance of B2C e-commerce city distribution. It does not possess the function of warehousing or sorting of goods, but it plays a connecting role in the network. In the topology structure proposed in this article, the principal functions of this logistics node have the following three items: 1. Receive online shopping orders from RDC: 2. Temporarily store online shopping orders: 3. Transport online shopping to B2C logistics distribution sites in the city Order to complement the "last-mile" transportation of online shopping.

According to the above logistics operation mode, the B2C e-commerce logistics network optimization program needs to determine the number of logistics areas, the combination of logistics nodes, the location of RDC nodes and its connection relationship with the supply center, and also needs to calculate the logistics system Transportation costs and construction costs. Maintenance costs and system penalty costs. The basic connection status of the regional logistics network is: Plant-Supply Center is a many-to-many relationship. Supply Center-RDC is a many-to-many relationship. RDC-CDC is a many-to-many relationship. Due to the timeliness requirements of e-commerce logistics services, B2C e-commerce regional logistics transport is characterized by road transport. Due to the extremely wide distribution of B2C online shopping orders and uneven distribution of order density, some remote areas will also use third-party logistics companies to outsource the transportation strategy for border transportation. The thesis introduces the concept of online shopping order volume: the lowest level CDC of the logistics network topology structure of the e-commerce area designed by this article is invoked as the starting point for order aggregation. After the CDC aggregates all B2C online shopping orders in its jurisdiction, it is sent to the upstream RDC Order delivery requirements, after aggregating all the CDC online shopping orders in its jurisdiction, RDC sends the goods supply demand to the upstream supply center and suppliers. After receiving this goods logistics delivery demand from RDC, the supply center delivers to the district city logistics the center delivers related products.

3. Detailed design of B2C e-commerce logistics network

Since B2C e-commerce online shopping orders are widely distributed in cities and cities, and the density of online shopping orders of various logistics function nodes is closely related to the economic development of the region, the first step needs to be based on the online shopping order volume for all logistics function nodes. At the same time, due to the relatively concentrated distribution of production factories for certain commodities, this paper adopts the strategy of building a B2C supply center near the supplier's gathering place to integrate the commodity supply chain of B2C e-commerce enterprises.

(1) Design of specific storage and delivery mode of the supply centres.

The B2C e-commerce supply center is organized around the supplier's production plant. At the same time, it uses the most traditional commodity storage logistics operation mode, that is, each supplier directly transports the goods to the B2C supply center according to the B2C enterprise order demand. The main advantages of this warehousing model are this: the centralized warehousing of goods has exerted a scale effect. After the production is completed, goods directly enter the B2C e-commerce self-built logistics network, which ensures the source of large-selling goods on the B2C website. The system operation and maintenance costs are small. The B2C e-commerce supply center adopts trunk transportation to transport goods to the distribution centers of various districts and cities, which not only solve the problem of scattered transportation of commodities in the

existing mode, but also ensures the timeliness of commodity transportation. The B2C e-commerce supply center model designed in this paper can effectively help B2C e-commerce enterprises to achieve the goal of integrating supplier supply. The operation mode of B2C e-commerce supply center is illustrated in Fig. 3.

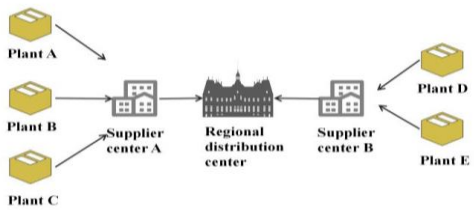

Figure 3. The operaioe pumerm of the supply center

(2) This article studies the specific operation process

The optimization scheme designed in this paper completes the network optimization and expansion of the logistics link in the B2C e-commerce area through quantitative analysis. The constructed plan not only needs to consider the cost factors such as the construction, operation and transportation of B2C city logistics network, but also needs to consider the logistics service level of the online shopping group. The technical architecture diagram of this paper is shown in Fig. 4.

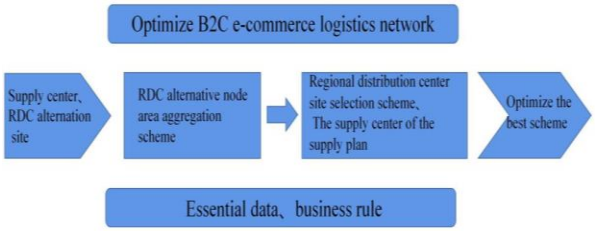

Figure 4. B2C E-Commerce logistics optimization techn iques frame work

The specific operation process studied in this article is as follows: According to the existing logistics resources of the enterprise, all B2C supply centers will be integrated. RDC candidate nodes and related business data of each candidate point are input as a set of qualified candidate nodes of the system, and then a mathematical model is used to quantify the network optimization scheme. After completing the zoning, location, and connection processes described inFig. 4, a set of optimal or nearly optimal B2C e-commerce district city logistics network optimization and expansion plans is finally obtained.

4. B2C e-commerce logistics network optimization model design

4.1 B2C e-commerce logistics network optimization model design

In order to achieve the goals of reducing the total logistics cost, improving the system order processing capacity, and improving the logistics service level of the B2C e-commerce district city logistics network. The paper research must be based on mathematical quantitative analysis and computer technology. Therefore, after determining the topology of the B2C e-commerce regional logistics network, a mathematical model that can accurately quantify various influencing factors in the network must be set up. At the same time, a suitable heuristic algorithm is utilized to solve the constructed model.

B2C e-commerce regional logistics network optimization seeks the best balance between the total cost of the logistics system and the logistics service level. The logistics service level can be quantified as a logistics cost factor in the form of service penalty cost. Is its most important decision factor. Therefore, before constructing a mathematical model, it is necessary in order to investigate all costs within the B2C e-commerce regional logistics network. Category, induction and summary. This paper divides the logistics cost in the B2C e-commerce district city logistics network into the following four categories: transportation cost system construction cost, System operation and maintenance costs and service penalty costs. This article will independently analyze and model these four types of costs to quantify the existing problems in the B2C e-commerce regional logistics network.

Transportation cost mainly refers to the transportation cost between supplying Center. RDC, RDC-CDC, that is, the path factor in the B2C e-commerce district city logistics network. B2C e-commerce logistics distribution is characterized by road transportation. The system construction cost refers to the construction cost of the B2C e-commerce district city logistics network, which mainly includes various construction costs of the supply center and the district city logistics distribution center. System operation and maintenance cost refer to the operation and maintenance cost of the B2C e-commerce regional logistics network, mainly refers to the daily operation and maintenance cost of the supply center and the regional logistics distribution center. It is the same as the B2C e-commerce regional logistics system construction cost-the same as B2C Node factors in the e-commerce zone city logistics

network. Service punishment cost refers to calculate the punishment cost for all logistics nodes in the region whose logistics service level is lower than its logistics service standard in order to ensure service quality and service timeliness of the B2C e-commerce district city logistics network. Customers turn to other B2C e-commerce enterprises in a one-to-one ratio. This step demands a search for all nodes. This article uses this strategy to make sure the balance of the total logistics cost of the system and the level of logistics services. The punishment cost of the paper award service is seen as the circulation quality factor of B2C e-commerce district city logistics.

The model of this paper is performed in two stages. In the first-stage, the node area and city aggregation will be performed. Taking all RDC candidate nodes as a set, according to the online shopping order flow of each logistics candidate node and the economic distance between them, the regional aggregation of each RDC candidate node will Several large regions are formed nationwide. The second stage is built on cost analysis, after the regional aggregation is completed. The paper takes care of the transportation cost and system construction cost in the system. The four costs of system operation and maintenance cost and service penalty cost are quantitatively analyzed to identify the B2C e-commerce distribution center in each area.

The mathematical model constructed in this paper is built on the following assumptions: 1. Select RDC nodes in certain candidate points: 2. Each CDC node can only be covered by one RDC node, that is, it is only connected to-RDCs: 3. CDC Each online shopping order within the jurisdiction is made available by the CDC: 4. The products supplied by the supply center are products with relatively larger sales volume on the website: 5. The total number of orders processed and the total floor area of the district logistics distribution center meet-. The threshold value: 6. The types of commodities stored in each RDC can ensure that the needs of B2C website product diversity are met: 7. The land applied by the supply center and the district city distribution center is mainly rented: 8. When the enterprise cannot meet the customer logistics service standards Customers will switch to other B2C e-commerce companies with a specified probability: 9. The location of the supply center is fixed. Its location is based on the industry characteristics of various regions in China: 10. Distance and transportation rates between functional nodes is provided by enterprises or third-party logistics companies.

Table 1 detail the letters appearing in the first-stage model of the thesis and the specific meanings they represent. Table 2 details the letters appearing in the second stage model of the thesis and the specific meanings they represent.

Table 1. **The first stage model letters and meanings**

Letter	Meaning	Letter	Meaning
I	Collection of all logistics nodes	r_i	The number of online shopping orders before aggregation in the node i area
α_i	Online shopping penetration rate of node i	β_i	Average online shopping volume of online shopping netizens at node i
γ_i	Node i website brand recognition	A_i	Number of Internet users at node i
ER_{ij}^2	Economic distance between node i and node j	D_{ij}	Transport distance between node i and node j
C_{ij}	Order shipping rate between node i and node j	T_{ij}	Order strength between node i and node j
ω_{ij}	The 0-1 index connecting node i and node j	M	The number of logistics blocks after aggregation
R_m	The total order of area m after aggregation	I_m	Set of nodes in area m after aggregation
δ_i	Whether node i is the 0-1 index of the aggregation center	M_1	Regional minimum order volume
M_2	Regional maximum order limit	N_1	The minimum number of logistics blocks
N_2	Maximum number of logistics blocks		

Table 2. **Model letters of the second stage and meanings**

Letter	Meaning	Letter	Meaning
T_1	Total transportation cost from supply center to regional distribution center	E	The number of existing supply centers in the network

F	Supply Center Total Supply	δ_m^i	Whether node i is the 0-1 indicator of the regional distribution center
ω_i^f	Whether the source f is the 0-1 indicator of the delivery to node i	D_{fi}	The distance between the supply center where the source f is located and the node i
G_i^f	The number of goods delivered by the source f to the node i	K	The total number of goods supplied by the supply center
ψ_f	Unit transportation rate of the source commodity in f	φ_k	The average number of products included in the kth product in each order
G_{min}^f	F limit the supply of goods supply	G_{max}^f	F limit the supply of goods supply
T_2	Cost of regional distribution center to city distribution center	ξ_{ij}	The 0-1 index connecting node i and node j
μ	Order shipping rate	S_{m1}	Storage area of area m
x	The average storage area required for each order	y	Floor space for storing order shelves
v	Redundancy factor of the commodity warehouse at the distribution center	ϑ_1	Average storage turnover rate of commodities
z	Average storage area of shelves	S_{m2}	Sorting area of regional distribution center
π	Number of orders supported per unit of sorting area	S_{m3}	Order delivery area of regional distribution center
τ	The number of orders supported per unit of warehouse operation area	S_m	Total area of regional distribution center
ϕ_1	Redundancy factor of storage in regional distribution center	W_1	The total cost of building warehouses in regional distribution centers
C^1	Distribution center rent per square meter	C^2	Construction cost per square meter in the storage operation area of the distribution center
C^3	Construction cost per square meter in the sorting operation area of the distribution center	d_m	The fixed cost of setting up a distribution center in area m
S_e'	The storage area of the supply center e	S_e^f	Supply center e stores the area of the fth source commodity
K_f	The average storage area of the fth source commodity	ϑ_2	Supply Center Commodity Turnover Rate
ϕ_2	Supply center storage redundancy factor	S_e	Total area of supply center e
C^4	Supply center construction cost per square meter	W_2	Supply Center Opening Cost
U_1	Regional distribution center daily operating costs	d_e	Fixed fee set up by supply center e
K^2	Operating expenses per square meter in the sorting area of the regional distribution center	K^1	Operating expenses per square meter in the storage area of the regional distribution center
K^4	Regional distribution center management cost per square meter	K^3	Operating expenses per square meter of the regional distribution center outbound area
P	Service penalty costs	U_2	Daily operation cost of supply center
p	Total average price of online shopping orders	ρ	Customer churn ratio
o_j	RDC's logistics service radius for node j	θ_j	Whether node j calculates the 0-1 index of service penalty cost

4.2 Regional aggregation of B2C e-commerce logistics networks

Before the regional aggregation, the online shopping orders within the jurisdiction of each logistics node must first be aggregated to obtain the online shopping order quantity of each RDC candidate node. Since the current domestic e-commerce industry is in a stage of rapid development, many uncertain factors jointly affect the online shopping orders of B2C e-commerce companies. If traditional sales forecasting methods are used to estimate the future online shopping orders of B2C e-commerce companies, greatly weaken the applicability of the model. Therefore, this article is based on the data of various online shopping bases of various RDC alternative points and the recognition of B2C e-commerce companies at the alternative points.

Estimate the amount of online shopping orders for B2C e-commerce companies at this RDC alternative node. The specific expression is as follows:

$$r_i = \alpha_i \beta_i A_i \quad (1)$$

This article uses the gravity model introduced earlier to aggregate the RDC alternative nodes of the B2C e-commerce regional logistics network, and calculates the total amount of online shopping orders in each region. Here, the economic distance between RDC alternative points is the order transportation cost between RDC alternative points, which represents the path distance factor between RDC alternative nodes. The specific expression is as follows:

$$ER_{ij}^2 = D_{ij} G_{ij} \quad (2)$$

From this, a gravitational model formula that aggregates RDC candidate nodes for area division can be derived, which represents the order gravity between RDC candidate point i and RDC candidate point j. The specific expression is as follows:

$$T_{ij} = \omega_{ij} \frac{r_i r_j}{ER_{ij}^2} = \omega_{ij} \frac{r_i r_j}{D_{ij} C_{ij}} \quad (3)$$

Thus, the total amount of online shopping orders in each logistics area after aggregation can be obtained. The specific expression is as follows:

$$R_m = \sum i \in I_m r_i \quad (4)$$

In summary, when the overall order gravity of the system reaches the maximum, the aggregation amount in the logistics area is the best. The overall model of the first stage of B2C e-commerce regional logistics network optimization is expressed as follows:

$$MAXZ_1 = \sum_{i=1}^{I} \delta_i T_i = \sum_{i=1}^{I} \sum_{\substack{j=1 \\ j \neq 1}}^{I} \delta_i \omega_{ij} \frac{r_i r_j}{D_{ij} C_{ij}} \quad (5)$$

$S.T.$

$$\sum_{i=1}^{I} \delta_i = M \quad (6)$$

$$M_1 \leq R_m \leq M_2 \quad (7)$$

$$N_1 \leq M \leq N_2 \quad (8)$$

$$\begin{cases} \sum_{i=1}^{I} \delta_i \omega_{ij} = 1, if \delta_j = 0 \\ \sum_{\substack{i=1 \\ i \neq j}}^{I} \delta_i \omega_{ij} = 0, if \delta_j = 1 \end{cases} \quad (9)$$

Among them, the constraints (6) and (7) represent the number of logistics regions, and the regional logistics network established by the B2C e-commerce company is restricted by various conditions inside and outside the company, so this needs to be clarified when the model is built. -Actual constraints. The bundle condition (8) indicates that the total amount of online shopping orders in each logistics area must meet a certain threshold. If the total amount of online shopping orders in the district is lower than its lower limit, the B2C e-commerce regional logistics distribution center it will construct will There is no guarantee of the variety of products sold on the website of the district city. If the total amount of online shopping orders in the district city is higher than its upper limit, the B2C electricity

The business district city logistics distribution center will be overloaded, resulting in a rapid increase in system costs.

4.3 Cost analysis of B2C e-commerce logistics network

Known from the above assumptions. The number of supply centers is limited and the location is entered as a known condition. At the same time, only products with relatively large sales volume on the website are supplied. On the other hand, a certain type of high-volume product in each regional distribution center can only be delivered to it by one supply center, so the many-to-many relationship between the supply center and the district city distribution center can be transformed into a -to-many relationship The conversion method is as follows: each commodity supplied by each supply center is numbered in turn, and each numbered

commodity is regarded as a source of supply. Each commodity has one or more sources of supplying. Each source of supplying belongs to only one supply center. The connection relationship between the regional distribution center and the supply center is transformed into the connection relationship between the district city distribution center and the supply source. Because each high-volume product in each regional distribution center has only one source for its replenishment. Thus, the many-to-many relationship between the district city distribution center and the supply center is transformed into a one-to-many relationship between the district city distribution center and the supply source. The paper deals with the transportation costs in logistics link of the B2C e-commerce zone. Solution base of system construction cost, system operation and maintenance cost and service penalty cost

Decomposed from the above relationship. The four types of costs are now quantitatively analyzed and modeled.

(1) Transportation cost of B2C e-commerce zone city logistics network.

Transportation costs in the B2C e-commerce regional logistics network mainly include the transportation costs of Supply Center-RDC and RDC-CDC. Transportation is mainly road transportation and belongs to the path factor in the network. the cost calculation process at this stage, the optimal transportation path and distance between any two RDC candidate points need to be input as a known condition. Obtaining the optimal path in a complex logistics network is generally a complex and dynamic problem, which is relatively difficult. This article therefore simplifies it a bit: First. It connects the existing nodes in the enterprise's existing logistics network. According to its historical data, determine the best path and the distance between these nodes: Secondly, connect to nodes that do not exist in other existing networks. The thesis uses the distance and path information provided by the third-party logistics company to determine the optimal path and distance between the two nodes. In this way, the pitch height matrix between any RDC candidate nodes are obtained.

To calculate the transportation cost, it is needed to determine the unit transportation rate between nodes. The determination of unit transportation rate needs to be considered

The following basic factors: transportation vehicle purchase cost, vehicle full load number, vehicle fuel consumption per hundred kilometers, personnel cost, daily Regular maintenance costs, diesel / gasoline unit prices and different toll rates for highways, national highways and provincial highways. Following the B2C.The two stages of e-commerce merchandise transportation discuss the transportation cost in detail.Supply Center-RDC transportation cost: B2C supply centres to B2C regional logistics distribution center Lose links. The cost calculation at this stage can be streamlined as: Calculate the distribution of each source to the district city distribution center.

Shipping of goods: fee. Then integrate the transportation costs of all sources to achieve this part of the transportation costs. Model table at this stage.

The description is as follows:

$$T_1 = \sum_{i=1}^{I} \sum_{f=1}^{F} \delta_m^i \omega_i^f D_{fi} G_i^f \psi_f \quad (10)$$

$$\sum f \in k \omega_i^f G_i^f = R_m \varphi_k, i \in I_m, \forall k \quad (11)$$

$$\sum_{i=1}^{I} \sum f \in k \omega_i^f G_i^f = \sum_{m=1}^{M} R_m \varphi_k, \forall k \quad (12)$$

$$\sum i \in I_m \sum f \in k\, \omega_i^f = 1, \forall k \quad (13)$$

$$G_{min}^{f \sum_{i=1}^{I} G_i^f \le G_{max}^f} \quad (14)$$

$$\sum i \in I_m \delta_m^i = 1, \forall m \quad (15)$$

$$\sum i \in I_m \sum_{f=1}^{F} \delta_m^i \omega_i^f = K, \forall m \quad (16)$$

Formula (11)

The flow of a certain category of goods in district city m is conserved, that is, the sales volume of a certain category of goods in area m is equal to the supply at the source of the commodity. Because the accurate calculation of the demand for a certain type of large-selling goods in each district city logistics distribution center is a complex dynamic problem Here, the model simplifies it, that is, by calculating the average number of such commodities contained in each online shopping order to estimate the demand for this type of commodities in each district city logistics distribution center.

Formula (12)

It means that the total amount of a certain type of goods is conserved, that is, the total amount of goods sent from all sources of this type of goods to the distribution centers of each district is equal to the district

The number of such commodities received by the city distribution center from the supply center.

Formula (13)

It means that the key commodity in district m can only be supplied by one source, that is, the source

and regional logistics distribution center have a one-to-many relationship.

Formula (14)

Represents the upper and lower limits of the source commodities that each source can supply. The lower limit indicates that if a source commodity wants to be a supply commodity of the supply center, then its supply volume at the supply center must reach a fixed Threshold. If this requirement cannot be met, the supply of the goods will not be able to meet the order demand of the district city distribution center, and the district city distribution center will also need to purchase goods from other sources. The upper limit value indicates that if the quantity supplied by the source exceeds this value. Will affect the supply center

The supply of other commodities leads to abnormal system supply.

The formula (15) indicates that there is only one B2C regional logistics distribution center in each logistics area. Formula (16) indicates that there is one and only one RDC alternative point in each district city connected to each commodity: a source of supply, and the RDC and source of supply in each logistics area belong to a-to many relationships.

RDC-CDC transportation costs: B2C District City Logistics Distribution Center and B2C City Distribution Center. The cost calculation at this stage can be simplified to calculate the cost of transporting online shopping orders from each B2C city logistics distribution center to each B2C city distribution center within its jurisdiction, and then integrating to obtain this part of the transportation cost. The specific expression of the model at this stage is as follows:

$$T_2 = \sum_{i=1}^{I} \sum_{\substack{j=1 \\ j \neq i}}^{I} \delta_m^i \xi_{ij} r_j \mu D_{ij} \quad (17)$$

The total transportation cost T of the B2C e-commerce logistics system is mainly composed of the above two stages of commodity and order trunk transportation.

The specific expression is as follows:

$$T = T_1 + T_2 = \sum_{i=1}^{I} \sum_{f=1}^{F} \delta_m^i \omega_i^f D_{fi} G_i^f \psi_f + \sum_{i=1}^{I} \delta_m^i \xi_{ij} r_j \mu D_{ij} \quad (18)$$

(2) Construction cost of B2C e-commerce district city logistics network.

The construction cost of B2C e-commerce regional logistics network mainly includes the construction cost of Suppy Center and RDC. It is one of the node factors of the B2C e-commerce district city logistics network. At this stage, it is necessary to calculate the specific cost of constructing a regional logistics distribution center at each RDC candidate point and depreciate it annually. The warehouse redundancy factor and inventory turnover rate of each RDC candidate node need to be combined. Warehouse construction costs. Construction costs of sorting facilities. Land rents in various places are entered as known conditions. These data are obtained by means of historical data extraction and cost estimation.

The following is a detailed description of the construction cost of the B2C e-commerce zone city logistics network in terms of the Supply Center construction cost and RDC construction cost. RDC construction costs. The cost modeling method of this part is: based on the total amount of online shopping orders in the district, determine the storage area, sorting operation area and outbound operation area of RDC, so as to obtain the total area of RDC, and then prepare according to RDC Find the location rent of the site, the construction cost of each functional operation area and the RDC fixed construction cost to find the warehouse storage cost of each RDC, and finally integrate all RDC warehouse storage costs.RDC's warehouse operation area is mainly responsible for storing goods sold on B2C websites. The calculation idea of this part of the operation area is to determine the storage operation area of RDC through the RDC online shopping order quantity. Since the number of online shopping orders in each district city is a fixed value after the aggregation of each district city, the storage operation area of RDC in the district city is-a fixed value. The specific expression is as follows:

$$S_{m1} = \frac{R_m xy}{\vartheta_1 vz} \quad (19)$$

RDC's sorting operation area is mainly responsible for sorting and packaging goods according to the online shopping order goods list. The calculation idea of this part of the operation area is to calculate the total sorting operation area by the maximum number of online shopping orders that can be processed by this functional operation area per square meter. After the area is divided, the total amount of online shopping orders in each area is-a fixed value. Therefore, the sorting area of RDC in this district is also a fixed value. The specific expression is as follows:

$$S_{m2} = \frac{R_m}{\pi} \quad (20)$$

RDC's outbound operation area is mainly responsible for leaving the sorted orders out of the

warehouse for loading. The calculation idea of this part of the operation area is similar to the calculation idea of the sorting operation area, that is, the total outbound operation area is calculated by the maximum online shopping order flow that can be processed by this functional operation area per square meter. After the aggregation of the districts and cities, the online shopping order volume of each district and city is a fixed value.

Therefore, the area of RDC outbound operations in the city is also a fixed value. The specific expression is as follows:

$$S_{m3} = \frac{R_m}{\tau} \quad (21)$$

Therefore, the total area of the B2C regional logistics distribution center can be obtained. The specific expression is as follows:

$$S_m = \frac{S_{m1} + S_{m2} + S_{m3}}{\varphi_1} = \frac{\frac{R_m xy}{\vartheta_1 vz} + \frac{R_m}{\pi} + \frac{R_m}{\tau}}{\varphi_1} \quad (22)$$

After calculating the working area of each working area. The total construction cost of the district logistics distribution center can be obtained. Because the construction cost per square meter of the outbound operation area is much lower than the construction cost per square meter of the storage operation area and the sorting operation area. Therefore, the paper does not include the construction cost of the outbound operation area into the modeling category. The specific expression is as follows:

$$W_1 = \sum_{m=1}^{M} (C^1 S_m + C^2 S_{m1} + C^3 S_{m2} + d_m) \quad (23)$$

Construction cost of Supply Center. The cost modeling method of this part is: based on the annual demand of a certain type of source commodities from the distribution centers of various districts and cities, determine the storage operation area of the source commodities stored in the supply center. Then aggregate the storage operation area of various commodities in the supply center to obtain the total area of the supply center, and then calculate the construction warehouse of each B2C supply center according to the land rent of the B2C supply center, the construction cost of the storage operation area and the fixed construction cost of the supply center Expenses, and finally integrate all the warehouse construction costs of B2C logistics supply centers.

The warehousing operation area of the B2C logistics supply center is mainly responsible for storing the commodities with large sales volume on the B2C website, and transporting these commodities to the logistics distribution centers of various districts. The calculation idea of this part of the operation area is: first determine the total shipment of each source commodity in the supply center, then calculate the storage area of each source commodity, and finally determine the total storage operation area of the logistics supply center. Unlike the storage operation area of the district city logistics distribution center, the storage operation area of the supply center is not a fixed value. The specific expression is as follows:

$$S_e' = \sum_{\substack{f=1 \\ f \in e}}^{F} S_e^f = \sum_{\substack{f=1 \\ f \in e}}^{F} \frac{\sum_{i=1}^{I} G_i^f}{\vartheta_2 K_f v} \quad (24)$$

This gives us the total floor space of the B2C supply center. Its specific expression is as follows:

$$S_e = \frac{S_e'}{\phi_2} = \sum_{\substack{f=1 \\ f \in e}}^{F} \frac{\sum_{i=1}^{I} G_i^f}{\vartheta_2 K_f v \phi_2} \quad (25)$$

In summary, you can get the warehouse construction cost of the B2C logistics supply center. The specific expression is as follows:

$$\begin{aligned} W_2 &= \sum_{e=1}^{E} (S_e (C^1 + C^4) + d_e) \\ &= \sum_{e=1}^{E} ((C^1 + C^4) \sum_{\substack{f=1 \\ f \in e}}^{F} \frac{\sum_{i=1}^{I} G_i^f}{\vartheta_2 K_f v \varphi_2} + d_e) \end{aligned} \quad (26)$$

The total construction cost W of the B2C e-commerce regional logistics system is mainly composed of the above two parts. The specific expression is as follows:

$$\begin{aligned} W = W_1 + W_2 &= \sum_{m=1}^{M} (C^1 S_m + C^2 S_{m1} + C^3 S_{m2} + d_m) \\ &+ \sum_{e=1}^{E} (S_e (C^1 + C^4) + d_e) \end{aligned} \quad (27)$$

(3) Operation and maintenance costs of the B2C e-commerce district city logistics network.

The operation and maintenance cost of the B2C e-commerce district city logistics network mainly refers to the 8 regular operation and maintenance costs of the B2C e-commerce logistics system, mainly including the daily operation and maintenance costs of Supply Center and RDC. It is also a node factor of the B2C e-commerce district city logistics network--. Cost calculation at this stage is based on the operation area of Supply Center and RDC. Each RDC alternative node and supply center's storage operation area per square meter of operation and maintenance costs. The operation and maintenance cost per square meter in the sorting operation area, the operation and maintenance cost per square meter in the outbound operation area, and the average management cost per square meter are input as known conditions.Into. These data are obtained by means of historical data extraction and cost estimation.

The following is a detailed analysis of the operation and maintenance cost of the B2C e-

commerce logistics system according to the RDC daily operating cost and SupplyCenter daily operating cost.

RDC daily operation and maintenance costs. The cost modeling method of this part is: based on RDC's warehousing operation area, sorting operation area and outbound operation area, calculate the daily operating costs of these three parts, and then calculate the management cost based on the total area of RDC, Finally, the daily cost of RDC can be obtained by synthesizing the above four expenses. The specific expression is as follows:

$$U_1 = \sum_{m=1}^{M}(k^1 S_{m1} + k^2 S_{m2} + k^3 S_{m3} + k^4 S_m) \quad (28)$$

Supply Center's daily operation and maintenance costs. This part of the cost modeling method is similar to the RDC daily operation and maintenance costs, that is: based on the storage area of the supply center, calculate the daily operation and maintenance costs of this part, and then calculate the management cost based on the total area of the supply center By integrating the above two expenses, the daily operation and maintenance cost of the supply center can be obtained.

The specific expression is shown in F:

$$U_2 = \sum_{e=1}^{E}(S_e^{'} k^1 + S_e k^4) \quad (29)$$

In summary, the operation and maintenance cost V of the B2C e-commerce regional logistics network can be obtained. The specific expression is as follows:

$$U = U_1 + U_2 = \sum_{m=1}^{M}(k^1 S_{m1} + k^2 S_{m2} + k^3 S_{m3} + k^4 S_m) + \sum_{e=1}^{E}(S_e^{'} k^1 + S_e k^4) \quad (30)$$

(4) B2C e-commerce regional logistics network services penalize costs.

The penalty cost of B2C e-commerce regional logistics network service refers to ensure the service quality and timeliness of B2C e-commerce regional logistics network. Penalty costs are calculated for all logistics nodes in the district city whose logistics service level is lower than their logistics service standards. At these nodes, customers are lost to other B2C e-commerce companies by a fixed percentage. This step requires a billing search for all nodes in all regions. The model in this paper uses this method to ensure the balance of total logistics costs and logistics service levels. It can be seen as the circulation quality factor of B2C e-commerce district city logistics.

The logistics service level of e-commerce online shopping orders is the core issue of the e-commerce industry, and this logistics service level is mainly reflected in the logistics transportation link that transports online shopping orders from RDC to CDC in the topology structure set out in the present article. Response time to CDC online shopping order delivery requirements. Since the model constructed in this paper is built on static data, the dynamic response time needs to be converted into a static RDC service radius, which can be converted into the maximum departure distance within a certain time limit of RDC. All logistics nodes in the search area city that degenerating into CDC. Against it

It depending on the online shopping order volume of each RDC candidate node, the logistics service level of these nodes is classified. This article divides all nodes into three categories based on logistics service standards: 1. For RDC alternative nodes with the largest online shopping orders, set their logistics service standards to level 1, B2C regional logistics network distribution system needs to provide the most Good logistics service level. For example, with RDC alternative nodes centered on Beijing and Shanghai: 2. For RDC alternative nodes whose online shopping orders are at a moderate level, set the logistics service standard to level 2. The B2C district city logistics network distribution system is required to provide medium-level Logistics service level. For example, RDC alternative nodes centered on Hangzhou and Jinan: 3. For RDC alternative nodes with the lowest online shopping order volume, the logistics service standard is set to 1evel 3. The B2C district city logistics network distribution system may provide these nodes-General logistics service level, or choose third-party logistics for order delivery for these nodes. It can be seen that RDC have different service radius for different CDC nodes in the same area. For CDC nodes with lower logistics service standards, the longer the RDC's service radius.

The penalty cost of B2C e-commerce regional logistics network service is mainly adjust by quantify the service level of B2C e-commerce logistics system. To eliminate the service penalty cost in the model can be achieved by subdividing the logistics area city, but although this meets the logistics distribution need of some CDC nodes, the total cost of the entire logistics system will be extremely large Rise. Therefore, a reasonable layout of the B2C e-commerce district city logistics network should be built on a certain number of logistics district cities, and at the same time calculate the service penalty cost for some CDC nodes in these district cities.

The modeling idea of B2C e-commerce district city logistics network service penalty cost is: If the RDC of a certain district city's logistics service level for a CDC node in its jurisdiction is lower than its logistics

service standard, that is, the CDC node to its RDC node the distance is greater than the service radius of RDC. The online shopping customers in the CDC node will be lost to other B2C companies by a specified percentage. If the service penalty rate is set to the average price of the online shopping orders lost by the B2C companies. The service penalty cost is the total value of online shopping orders reduced by the CDC node. That is, when a "red dot" phenomenon described in Fig. 5 occurs in a CDC node, the service penalty cost is calculated for the CDC node.

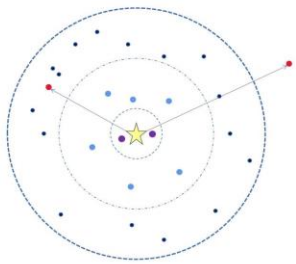

Figure 5. Service penalty cost principle

The specific model is expressed as follows:

$$P = \sum_{m=1}^{M} \sum_{j \neq i}^{i,j \in m} \delta_m^i \theta_j \rho\, pr_1 \quad (31)$$

$$\delta_m^i \theta_j = \begin{cases} 0, q_{i,j \le oj}, j \in I_m \\ 1, q_{i,j \ge oj}, j \in I_m \\ 0, q_{i,j \le oj}, j \in I_m \end{cases} \quad (32)$$

The formula (33) represents the specific judgment of whether a CDC node performs service punishment. This value is 1 if and only if the CDC is within the area m and the distance between RDC and it is greater than the service radius of RDC.

(5) The second stage model of B2C logistics network optimization

In summary, when the overall cost of the system reaches the minimum, the RC site selection scheme is the best. The overall model of the second stage of B2C e-commerce regional logistics network optimization is as follows:

$$MinmizeZ_2 = T + W + U + P \quad (33)$$

5. Case analysis application

5.1 Description of the example problem

At present, the regional logistics network just completed by a domestic B2C e-commerce company has 5 regional distribution centers and 53 urban distribution centers. However, there continue to be problems such as high system cost, limited service capacity, and unreasonable distribution of logistics resources. Regional logistics strategy to cut logistics system operating costs, improve system order processing capacity and logistics service quality. Our goal is tantamount to choose the most suitable optimization plan for the enterprise's strategic objectives, determine the RDC selection scheme and regional network construction method of the scheme to help enterprises achieve their strategic goals in the e-commerce regional logistics link.

The optimized B2C e-commerce company's commodity supply chain logistics business process is as follows: the supplier sends the product to the enterprise's supply center (hot sale product) or regional logistics distribution center, and the supply center transports the hot sale commodity trunk to the regional logistics distribution center , After the goods are stored, sorted, packed, and out of the regional logistics distribution center, the goods are sent to the city distribution centers in the form of orders in the form of orders, and finally the urban distribution link of the order begins, completing the door-to-door logistics distribution service of online shopping orders. In response to this process, this article mainly studies the logistics business of commodities from suppliers to regional logistics distribution centers and then to municipal distribution centers. For these logistics services, the optimal solution obtained by the algorithm includes the following: the combination of RDC alternative nodes, the location of RDC, the online shopping order flow of RDC, the connection between RDC and the supply center, the source of supply and RDC The supply relationship, the connection scheme between RDC and CDC, and the transportation cost, storage cost (integrated system construction cost and system operation and maintenance cost) and penalty cost of B2C regional logistics network and other cost information. The final optimization plan serves as the optimization and expansion plan of the enterprise's B2C e-commerce regional logistics network.

5.2 Analysis of example results

In this case, 53 logistics distribution centers of the B2C e-commerce enterprise in the country are used as RDC alternative points for input. Existing regional logistics network information of the enterprise is shown in Table 3. The specific information contained in the table is: the RDC site selection scheme of the existing system, the flow of RDC's online shopping orders, and the transportation cost and storage cost of the existing regional logistics network (Integrated cost of system construction cost and system operation and maintenance cost) and penalty cost and other cost information. By

comparing the four alternatives derived from the system, and at the same time combining the company's future development strategy and current industry development status, the enterprise has determined an optimized combination site selection plan containing 5 RDCs to optimize and expand the regional logistics network. Information about the optimization plan at this time is given in table 4.

Table 3 Final optimized combination site selection plan

RDC	Total order quantity (pieces)	Transportation cost (yuan)	Storage cost (yuan)	Penalty cost (yuan)	Total cost (yuan)
SH	6410014				
SZ	248905				
BJ	1389606	21460636.36	30576524.45	14183001.36	66220162.2
WH	1119088				
CQ	854480				

Table 4 Scheme before optimization

RDC	Total order quantity (pieces)	Transportation cost (yuan)	Storage cost (yuan)	Penalty cost (yuan)	Total cost (yuan)
GZ	4892392				
BJ	4445402				
SZ	7376646	29768852.14	59537704.28	17978194.53	107284751
WF	3184003				
CD	1944325				

The combination and connection relationship between RDC and CDC, RDC and supply center are shown in Table 5. Among them, the enterprise currently has three supply centers in the network. Supply center 1 can supply all three types of commodities, supply center 2 can supply types 2 and 3, and supply center 3 can supply 1.2 types of commodities. The specific number in the back hash of the table indicates the corresponding supply center.

Table 5 Node connection information of each layer

RDC	CDC	Goods1	Goods2	Goods3
GZ	SZ,FS,CS,DG,QZ,KM,GY,NN	1	1	1
BJ	TJ,SY,TS,HEB,CC,SJZ,DQ,TY,DL	3	3	2
SZ	SH,HZ,WX,WH,NJ,NB,NT,FZ,XZ,CZ,HF,WZ,SX,YC,NC	1	2	2
WF	QD,YT,ZZ,JN,ZB,JN,LY	3	2	2
CD	XA,CQ,EEDS,BT,LZ,HHHT,YC,WLMQ	1	1	1

After optimization and expansion, the annual online shopping order processing capacity of the B2C e-commerce regional logistics network is 21,842,768, which is better than the 12,262,993 before the logistics network optimization. Although the total cost of the system has increased by 41064588.8 yuan compared with before the optimization, the reason for the increase in cost here is mainly because the processing capacity of the online logistics order volume of the regional logistics network has been greatly improved. The unit cost is 491 yuan, which is better than the 5.4 yuan before optimization.

Based on the above results, it can be considered that this logistics network optimization and expansion plan application has a significant optimization effect.

6. Conclusion

This article is based on the investigation and research on the industry status of domestic B2C e-commerce regional logistics business, combined with the logistics network optimization facility location strategy and enterprise supply chain integration strategy, focusing on the research of the B2C e-commerce enterprise self-built logistics system regional logistics link network topology , The location

of regional logistics distribution centers, regional aggregation of logistics function nodes, B2C enterprise supply chain integration, and customer logistics service penalties. Based on the in-depth analysis and research of domestic B2C e-commerce regional logistics business, this paper first designs and constructs a network topology and mathematical model that conforms to the characteristics of domestic B2C e-commerce regional logistics business, and then uses an improved genetic algorithm to solve the model Finally, an example is used to verify the research results of this paper, and the research goals of this paper are completed.

Acknowledgements: The study was supported by the major project of the National Social Science Fund "Research on the Big Data Legal Legislation Program" (18ZDA136);Special Funds for Fundamental Research Expenses of Central Universitie;Funded by the Central University of Finance and Economics Research and Innovation Team Support Program.

Conflicts of Interest: The authors declare no conflict of interest.

References

[1] E. Melachrinoudis and H. Min, "Redesigning a warehouse network," European Journal of Operational Research, vol. 176, no. 1, pp. 210-229, 2007.

[2] H. C. Lau, Z.-Z. Jiang, W. H. Ip, and D. Wang, "A credibility-based fuzzy location model with Hurwicz criteria for the design of distribution systems in B2C e-commerce," Computers & Industrial Engineering, vol. 59, no. 4, pp. 873-886, 2010.

[3] F. Kiya and H. Davoudpour, "Stochastic programming approach to re-designing a warehouse network under uncertainty," Transportation Research Part E: Logistics and Transportation Review, vol. 48, no. 5, pp. 919-936, 2012.

[4] L. Yanqiu and Z. Yilan, "Research on B2C E-commerce Logistics Distribution Model," Logistics Technology, vol. 29, no. 9, pp. 60-62, 2006.

[5] Z. Wang, D.-Q. Yao, and P. Huang, "A new location-inventory policy with reverse logistics applied to B2C e-markets of China," International Journal of Production Economics, vol. 107, no. 2, pp. 350-363, 2007.

[6] T. C. Du, E. Y. Li, and D. Chou, "Dynamic vehicle routing for online B2C delivery," Omega, vol. 33, no. 1, pp. 33-45, 2005.

[7] F. Yuejian, "Research on Logistics Distribution Vehicle Scheduling Method in E-commerce Environment[D]," Zhejiang University, 2006.

[8] L. Weijian, "Research on Optimization of Logistics Distribution Path under B2C E-commerce Model [D]," Beijing Jiaotong University, 2007.

[9] R. Ramanathan, "The moderating roles of risk and efficiency on the relationship between logistics performance and customer loyalty in e-commerce," Transportation Research Part E: Logistics and Transportation Review, vol. 46, no. 6, pp. 950-962, 2010.

[10] Y. Lu, L. Zhao, and B. Wang, "From virtual community members to C2C e-commerce buyers: Trust in virtual communities and its effect on consumers' purchase intention," Electronic Commerce Research and Applications, vol. 9, no. 4, pp. 346-360, 2010.

[11] A. M. Al-Momani, M. A. Mahmoud, and M. S. Ahmad, "Factors that influence the acceptance of Internet of things services by customers of telecommunication companies in Jordan," Journal of Organizational and End User Computing (JOEUC), vol. 30, no. 4, pp. 51-63, 2018.

[12] T. Grublješič, P. S. Coelho, and J. Jaklič, "The shift to socio-organizational drivers of business intelligence and analytics acceptance," Journal of Organizational and End User Computing (JOEUC), vol. 31, no. 2, pp. 37-64, 2019.

[13] L. Z. Zhang, M. Mouritsen, and J. R. Miller, "Role of perceived value in acceptance of "Bring Your Own Device" policy," Journal of Organizational and End User Computing (JOEUC), vol. 31, no. 2, pp. 65-82, 2019.

[14] S. Ivanaj, G.-B. Nganmini, and A. Antoine, "Measuring E-Learners' Perceptions of Service Quality," Journal of Organizational and End User Computing (JOEUC), vol. 31, no. 2, pp. 83-104, 2019.

[15] C.-L. Wei and C.-T. Ho, "Exploring signaling roles of service providers' reputation and competence in influencing perceptions of service quality and outsourcing intentions," Journal of Organizational and End User Computing (JOEUC), vol. 31, no. 1, pp. 86-109, 2019.

[16] H. Kim, "Investigating the mediating role of social networking service usage on the big five personality traits and on the job satisfaction of Korean workers," Journal of Organizational and

End User Computing (JOEUC), vol. 31, no. 1, pp. 110-123, 2019.

[17] R. S. Bhadoria and N. S. Chaudhari, "Pragmatic sensory data semantics with service-oriented computing," Journal of Organizational and End User Computing (JOEUC), vol. 31, no. 2, pp. 22-36, 2019.